RevNo	Revision note	Date	Signature	Checked

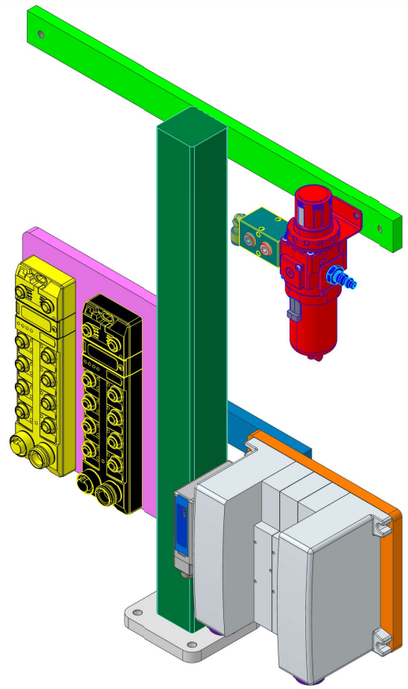

ITEM NUMBER	QTY	PART NUMBER	PART NAME	REV
1	1	FC-24-21740-UCM	Upper Control Mount Arm	A
2	1	7699N26	Universal-Thread PTC Fitting for 3/8" Tube OD x 3/8 Pipe Size	N/A
3	2	50785K213	High-Pressure Brass Pipe Fitting 1/4 NPT	N/A
4	1	5469K103	Anodized Aluminum Right-Angle Flow Manifold	N/A
5	1	AW30K-N03-Z-D	SMC Air Pressure Regulator	N/A
6	1	6534K47	Industrial Quick-Disconnect Hose Coupling for Air 1/4" Size, 3/8 NPTF Male End	N/A
7	1	TBEN-L4-8DIP-8DOP	TURCK I/O Block	N/A
8	1	TBEN-LH-16DIP	TURCK I/O Block	N/A
9	1	FC-24-21740-VRT	Vertical Tube	A
10	1	HHB-171325	Air Valve and Contol Assembly	N/A
11	2	KQ2P-07	1/4" x 1" PTC Plugs	N/A
12	2	7353N15	Muffler, 3/4 BSPP Male, 126 scfm @ 100 PSI, 11/16" High	N/A
13	1	50785K115	High-Pressure Brass Pipe Fitting 1/2 NPT	N/A
14	1	7699N31	Universal-Thread PTC Fitting for 1/2" Tube OD x 1/2 Pipe Size	N/A
15	1	4936K916	Compact Steel Pipe Fitting, Plug with Hex Drive, 1/8 BSPP Male	N/A
16	1	KQ2H07-34AS	Universal-Thread PTC Fitting for 1/4" Tube OD x 1/8 NPT	N/A
17	1	FC-24-21740-THM	TURCK I/O Hub Mounting Plate	A
18	1	FC-24-21740-CCB	Control Cross Beam	A
19	1	FC-24-21740-VMP	VQC4000 Manifold Mount Plate	A
20	1	FC-24-21740-HZB	HorizontalBracket	A
21	1	FC-24-21740-4SB	4 x 4 Stand Base	A

ALL FC-24-21740 COMMON CONTROL STAND ASSEMBLY

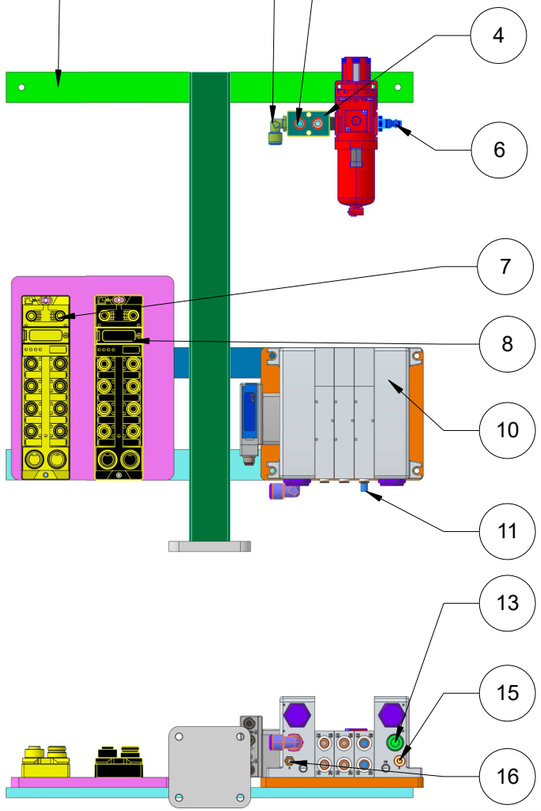

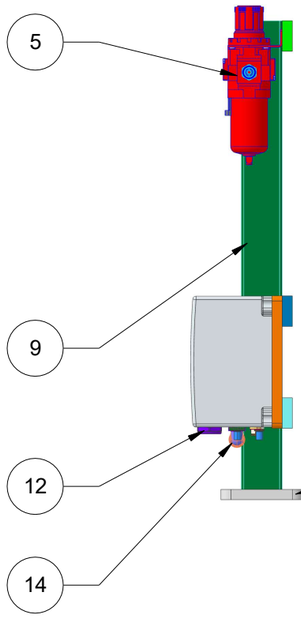

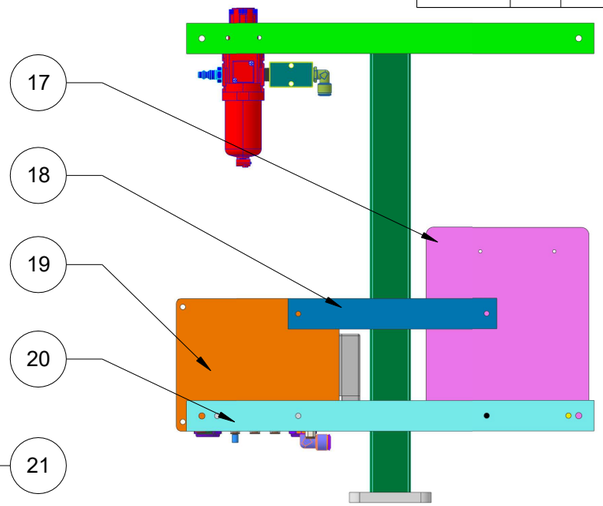

Itemref	Quantity	Title/Name, designation, material, dimension etc		Article No./Reference	
Drawn by D. BADER	Checked by	Approved by - date	File name	Date JUNE 30TH, 2025	Scale 1:1

FEEDING CONCEPTS, INC.
Automatic Parts Feeding Equipment
15235 Herriman Blvd.
Noblesville, IN 46060
(317) 773-2040

CONTROL STAND ASSEMBLY

RHINO FC-24-21740	Edition	Sheet
		1 OF 1